MARKER CODE				

STUDENT ENROLMENT NUMBER (SEN)									

TONGA FORM SIX CERTIFICATE 2020

DESIGN TECHNOLOGY

QUESTION AND ANSWER BOOKLET

Time allowed: 3 Hours

INSTRUCTIONS:

1. Write your **Student Enrolment Number (SEN)** on the top right-hand corner of this page.
2. This examination has **FIVE MAJOR AREAS**. Each **AREA** is out of 70 weighted scores.
3. Answer **ONLY ONE MAJOR AREA**. **DO NOT** answer ALL THE MAJOR AREAS.

MAJOR AREAS		TOPICS	TOTAL SKILL LEVEL
	Please √ choice	**OPTIONAL QUESTIONS** Choose **ONE** (Major 1 – Major 5)	
1		**WOOD TECHNOLOGY**	**70**
2		**METAL TECHNOLOGY**	
3		**FOOD TECHNOLOGY**	
4		**TEXTILES AND GARMENT CONSTRUCTION**	
5		**TECHNICAL GRAPHICS**	
		TOTAL	**70**

4. Answer ALL QUESTIONS. Write your answers in the spaces provided in this booklet.
5. Use a **BLUE** or **BLACK** ball point pen only for writing. Use a pencil for drawing if required.
6. If you need more spaces for answers, ask the supervisor for extra paper. Write your **Student Enrolment Number (SEN)** on each additional sheet, number the questions clearly and insert them in the appropriate places in this booklet.
7. Check that this booklet contains pages 2-67 in the correct order and that page 67 have been deliberately left blank.

YOU MUST HAND IN THIS BOOKLET TO THE SUPERVISOR BEFORE YOU LEAVE THE EXAMINATION ROOM.

MAJOR AREA 1: WOOD TECHNOLOGY

A. Multiple Choice:

Circle the letter of the **BEST** answer.

1. The greatest timber shrinkage took place in the direction of the:

   A. Sap Wood.
   B. Cambium Layers.
   C. Medullary Rays.
   D. Growth Rings.

Skill level 1	
1	
0	
NR	

2. Hardwood tress can be identified by:

   A. Losing their leaves in winter.
   B. Broad green leaves.
   C. Needle shaped leaves.
   D. Closed fruits on the tree.

Skill level 1	
1	
0	
NR	

3. What is the main purpose of a material list?

   A. To identify the components.
   B. To identify the position of each components.
   C. To identify size, quantity and type of materials.
   D. To assist in the assembly processes.

Skill level 1	
1	
0	
NR	

4. What is the correct name for the hand tool given below?

   A. Sliding Bevel.
   B. Try Square.
   C. Marking Gauge.
   D. Straight Edge.

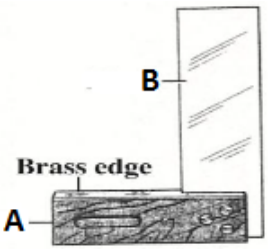

Skill level 1	
1	
0	
NR	

5. What type of screw is the most suitable to achieve a flush fitting surface in timber?

   A. Round head.
   B. Raised head.
   C. Pan head.
   D. Countersunk head.

Skill level 1	
1	
0	
NR	

6. What is the name of the part with label A of the hand tool given below?

   A. Stem.
   B. Stock.
   C. Blade.
   D. Handle.

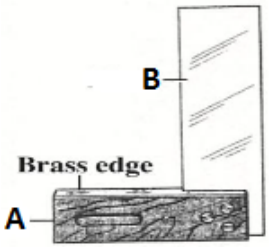

Skill level 1	
1	
0	
NR	

7. What Stage of the design process where “Develop and refine the idea” took place?

A. Investigating.
B. Devising.
C. Making.
D. Evaluating.

Skill level 1	
1	
0	
NR	

8. What Stage of the design process where ***“Clarify the problem”*** took place?

A. Investigating.
B. Devising.
C. Making.
D. Evaluating.

Skill level 1	
1	
0	
NR	

9. What Stage of the design process where ***“Implement a decision”*** took place?

A. Investigating.
B. Devising.
C. Making.
D. Evaluating.

Skill level 1	
1	
0	
NR	

10. What Stage of the design process where ***“How well does it work”*** took place?

A. Investigating.
B. Devising.
C. Making.
D. Evaluating.

Skill level 1	
1	
0	
NR	

B. Short and Long Answer Questions:

Answer ALL the questions given.

1. **Design**

a. Define the term **Design Brief**.

Skill level 1	
1	
0	
NR	

b. Briefly describe the stage of **Making** in the design process.

Skill level 2	
2	
1	
0	
NR	

c. Explain what is involved in the Evaluating Stage of the design process of your project that you used in your Internal Assessment (IA) this year.

Skill level 3	
3	
2	
1	
0	
NR	

2. **Manufactured Materials and Manufacturing Process**

a. Name the appropriate uses of plywood.

Skill level 1	
1	
0	
NR	

b. List **TWO** manufactured materials available in Tonga.

1. _____

2. _____

Skill level 2	
2	
1	
0	
NR	

c. Briefly explain the processes for the manufacturing of Laminates.

_____

_____

_____

_____

_____

_____

_____

Skill level 3	
3	
2	
1	
0	
NR	

d. List and discuss **TWO** different types of work that can be done on a wood lathe machine. Include in your discussion the skills and techniques used.

_____

_____

_____

_____

_____

_____

_____

_____

_____

_____

Skill level 4	
4	
3	
2	
1	
0	
NR	

3. **Characteristics and Properties of Timber**

a. Briefly explain the characteristic of a hardwood.

_____

_____

_____

_____

_____

_____

_____

Skill level 3	
3	
2	
1	
0	
NR	

b. Timber Conversion

i. List the **TWO** methods of conversion of timber.

1. _____

2. _____

Skill level 2	
2	
1	
0	
NR	

ii. Explain **ONE** method of conversion of timber.

_____

_____

_____

_____

_____

_____

_____

_____

_____

Skill level 3	
3	
2	
1	
0	
NR	

c. Seasoning of Timber

i. Briefly explain the **Artificial or Kiln Seasoning**

_____

_____

_____

_____

_____

_____

_____

_____

_____

Skill level 3	
3	
2	
1	
0	
NR	

ii. Discuss the problems had occurred during seasoning.

_____

_____

_____

_____

_____

Skill level 4	
4	
3	
2	
1	
0	
NR	

d. Moisture Content of Timber

i. Calculate the moisture content (MC) of a sample piece of timber weight 230 grams. After oven trying, the weight of the timber goes down to 200 grams.

Skill level 2	
2	
1	
0	
NR	

ii. What is the application of the timber with the calculated moisture content in part i?

Skill level 1	
1	
0	
NR	

e. Property and Quality of Timber

i. Explain **ONE** important property of Timber.

Skill level 3	
3	
2	
1	
0	
NR	

ii. Explain what you mean by the Quality of Timber.

_____

_____

_____

_____

_____

_____

_____

_____

_____

Skill level 3	
3	
2	
1	
0	
NR	

4. **Project**

Study the dining table below and answer the following questions.

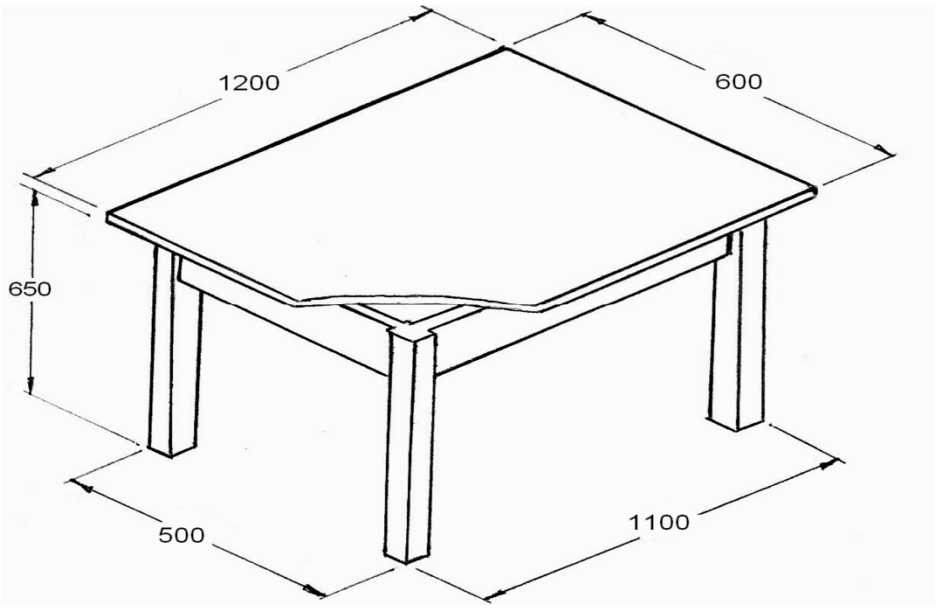

a. Interpreting working drawing

Complete the table below with the total length of each component of the dining table.

Table Parts	**Size**	**Total Length (mm)**
Leg	75 mm x 75 mm	
Rail	25 mm x 75 mm	
Top	25 mm x 100 mm	

Skill level 3	
3	
2	
1	
0	
NR	

b. Costing and Quantifying Materials

Use the information below and calculate the cost of the timber required for the dining table.

Table Parts	**Size**	**Material**	**Cost**
Leg	75 mm x 75 mm	Hardwood - Tawa	$8.50/m
Rail	25 mm x 75 mm	Hardwood - Tawa	$4.30/m
Top	25 mm x 100 mm	Hardwood - Tawa	$6.20/m

i. Cost of the 4 Legs

_____

ii. Cost of the 4 Rails

_____

iii. Cost of the Top

_____

Total Cost of the timber for the Dining Table: _____

Skill level 3	
3	
2	
1	
0	
NR	

c. Joints and Construction

i. List **TWO** wood joints that can be used to join the rail and the leg of the dining table

1. _____

2. _____

Skill level 2	
2	
1	
0	
NR	

ii. If you are to make the dining table, choose the joints from part i. and explain why that type of joint is used.

_____
_____
_____
_____
_____
_____
_____
_____
_____
_____
_____
_____
_____
_____
_____
_____

Skill level 3	
3	
2	
1	
0	
NR	

5. **Tools and Materials.**

a. What is the name of the part of the hand tool given below with **label A**.?

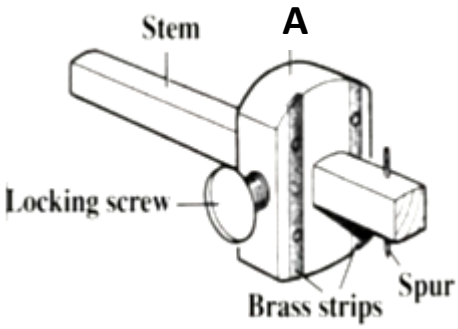

A = _____.

Skill level 1	
1	
0	
NR	

b. Define hand tools

_____
_____

Skill level 1	
1	
0	
NR	

c. Identify **ONE** tool used for applying the finishes of timber.

_____

Skill level 1	
1	
0	
NR	

d. Hand tools are classified into groups. Name any **TWO** groups.

1. _____

2. _____

Skill level 2	
2	
1	
0	
NR	

e. Discuss the importance of understanding tools according to their uses.

_____

Skill level 4	
4	
3	
2	
1	
0	
NR	

MAJOR AREA 2: METAL TECHNOLOGY

A. Multiple Choice Questions:

Circle the letter of the **BEST** answer.

1. Which of the following is an example of ferrous metal?

   A. Cast iron.
   B. Aluminium.
   C. Copper.
   D. Tin.

Skill level 1	
1	
0	
NR	

2. Which is the best type of welding machine for welding pipes?

   A. Oxy-Acetylene.
   B. Arc - Welding.
   C. MIG Welding.
   D. MAG Welding.

Skill level 1	
1	
0	
NR	

3. This is the part of the Oxy-Acetylene plant where oxygen and acetylene mixed?

   A. Regulator.
   B. Welding Tip.
   C. Welding Hose.
   D. Blow pipe.

Skill level 1	
1	
0	
NR	

4. What Stage of the design process where ***"Clarify the problem"*** took place?

   A. Investigating.
   B. Devising.
   C. Making.
   D. Evaluating.

Skill level 1	
1	
0	
NR	

5. What Stage of the design process where ***"Implement a decision"*** took place?

   A. Investigating.
   B. Devising.
   C. Making.
   D. Evaluating.

Skill level 1	
1	
0	
NR	

6. What Stage of the design process where ***"How well does it work"*** took place?

   A. Investigating.
   B. Devising.
   C. Making.
   D. Evaluating.

Skill level 1	
1	
0	
NR	

B. Short and Long Answer Questions

Answer ALL the questions given.

1. **Design**

a. Define the term Design Brief.

Skill level 1	
1	
0	
NR	

b. Briefly describe the stage of Making in the design process.

Skill level 2	
2	
1	
0	
NR	

c. Evaluate what is involved in the Evaluating Stage of the design process of your project that you used in your Internal Assessment (IA) this year.

Skill level 3	
3	
2	
1	
0	
NR	

2. **Workshop Safety**

Study the cartoon below and answer the questions that follow:

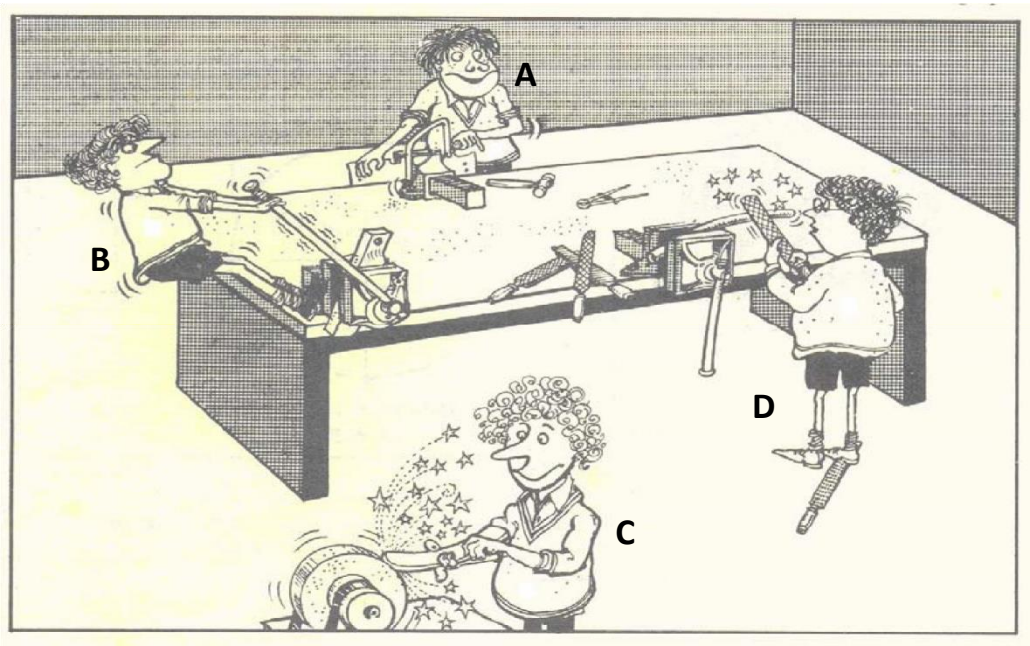

a. Describe **ONE** way in which boy **B** is neglecting common sense safety practice in which he is working.

Skill level 1	
1	
0	
NR	

b. Give **ONE** reason why the grinding machine shown is dangerous and should not be used.

Skill level 1	
1	
0	
NR	

c. Briefly explain the uses of the cutting tools used by boy **D**.

Skill level 3	
3	
2	
1	
0	
NR	

3. **Metal Classification and Molecular Structure**

a. Name **ONE** non-Ferrous Metal?

Skill level 1	
1	
0	
NR	

b. Name **ONE** molecular structure of metal.

Skill level 1	
1	
0	
NR	

c. Describe non-Ferrous metals.

Skill level 2	
2	
1	
0	
NR	

d. Classify the classification of metals.

Skill level 3	
3	
2	
1	
0	
NR	

e. Describe **ONE** process applied in producing steel.

Skill level 2	
2	
1	
0	
NR	

f. Evaluate the processes applied in producing steel.

_____

_____

_____

_____

_____

_____

_____

_____

Skill level 4	
4	
3	
2	
1	
0	
NR	

g. Explain the effects of molecular structure of metals.

_____

_____

_____

_____

_____

_____

_____

_____

Skill level 3	
3	
2	
1	
0	
NR	

4. **Characteristics of Metal**

a. Give **ONE** physical property of metal.

_____

Skill level 1	
1	
0	
NR	

b. Define Elastic Limit in relation to metal.

_____

_____

_____

Skill level 1	
1	
0	
NR	

c. List **TWO** mechanical properties of metal.

1. _____

2. _____

Skill level 2	
2	
1	
0	
NR	

d. Classify the properties of Metal.

_____

_____

_____

_____

_____

_____

_____

Skill level 3	
3	
2	
1	
0	
NR	

e. Evaluate the properties of High-Speed Steel where most cutting tools are made out of.

_____

_____

_____

_____

_____

_____

_____

Skill level 4	
4	
3	
2	
1	
0	
NR	

5. **Heat, Forging Process and Metal Finishing Process**

a. Anvil is one of the tools used in forging process. Label the part of the anvil indicated by letter A

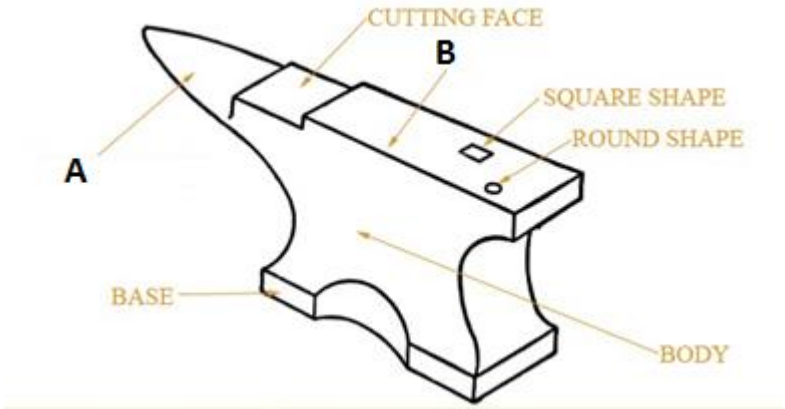

A: _____

Skill level 1	
1	
0	
NR	

b. What is the use of the following forging tools during forging process?

i. Tongs

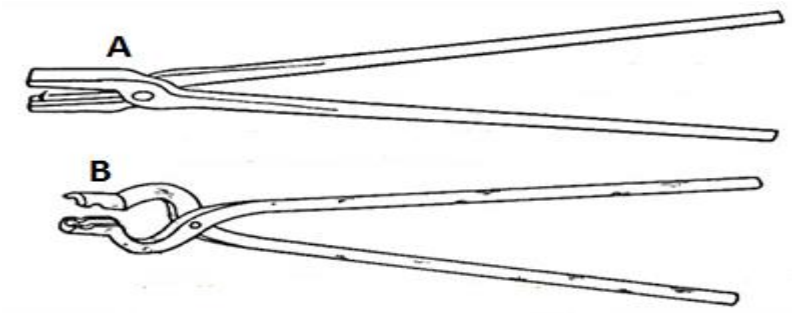

Use: _____

_____

Skill level 1	
1	
0	
NR	

ii. Swages

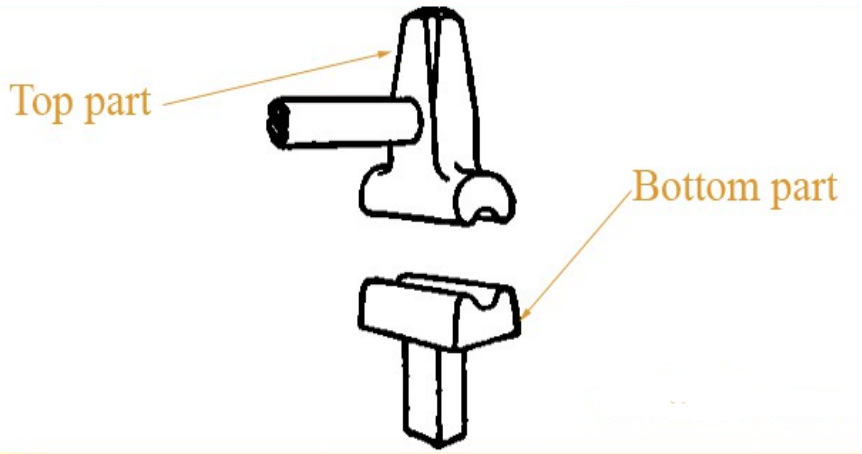

Use: _____

_____

Skill level 1	
1	
0	
NR	

c. Briefly describe why we do tempering in the process of heat treatment of a chisel.

_____

_____

_____

_____

_____

_____

_____

_____

Skill level 2	
2	
1	
0	
NR	

d. Name and evaluate **ONE** type of metal finishing process

Name: _____

Skill level 4	
4	
3	
2	
1	
0	
NR	

6. **Use of tools, equipment and Welding**

Study the diagram of a centre punch given below and answer the following questions. The centre punch is required to do it using a lathe machine.

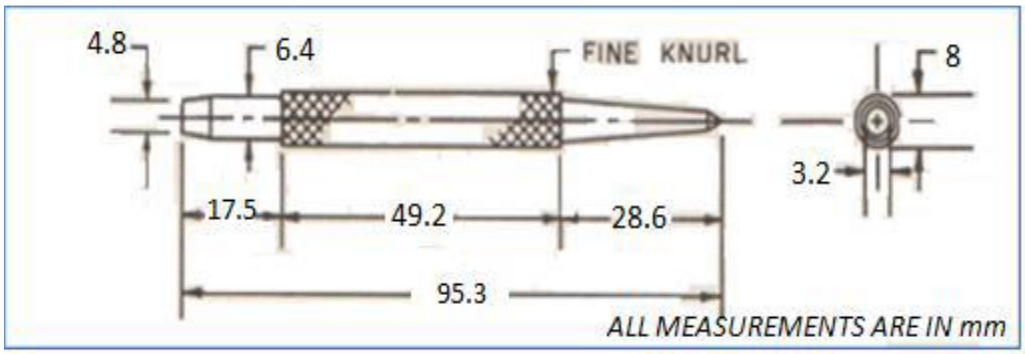

a. Describe the uses of lathe machine.

Skill level 2	
2	
1	
0	
NR	

b. Explain in point form how you make the centre punch using lathe machine.

Skill level 3	
3	
2	
1	
0	
NR	

c. List and explain all the cutting tools used in making the centre punch.

Skill level 3	
3	
2	
1	
0	
NR	

d. List and explain all the measuring tools used in making the centre punch.

Skill level 3	
3	
2	
1	
0	
NR	

e. Explain the appropriate welding processes when using arc welding.

Skill level 3	
3	
2	
1	
0	
NR	

f. Briefly explain the band saw and its uses.

Skill level 3	
3	
2	
1	
0	
NR	

MAJOR AREA 3: FOOD TECHNOLOGY

SECTION A: Multiple Choice Questions

Circle the letter of the **BEST** answer.

1. Energy can be provided in large amounts, for the body's use, by 3 of the essential nutrients. The **THREE** nutrients are _____

   A. Carbohydrates, vitamins and minerals.
   B. Fats, carbohydrates and vitamins.
   C. Carbohydrates, proteins and fats.
   D. Fats, proteins and minerals.

Skill level 1	
1	
0	
NR	

2. In order for nutrients to be used by the body, food must first be _____ or taken into the body.

   A. digested
   B. absorbed
   C. ingested
   D. metabolized

Skill level 1	
1	
0	
NR	

3. Macro nutrients are _____

   A. provided by the digestion process.
   B. those that the body cannot store.
   C. needed by the body in very small amounts.
   D. the insoluble nutrients that must be prepared carefully.

Skill level 1	
1	
0	
NR	

4. When food is broken down into the stage where nutrients are available, it is referred to as _____.

   A. digestion
   B. absorption
   C. assimilation
   D. oxidation

Skill level 1	
1	
0	
NR	

5. The concept that preserves food by taking off the moisture content of the food is called _____.

   A. smoking
   B. freezing
   C. drying
   D. salting

Skill level 1	
1	
0	
NR	

6. Processing food by cooking has the advantages of _____.

   A. improving flavor of the food.
   B. decreasing the cost of the dish.
   C. improving the palatability of vegetables.
   D. ensuring the nutrients are not destroyed.

Skill level 1	
1	
0	
NR	

7. Food spoilage means

   A. food deterioration
   B. changes that render food unfit for human consumption.
   C. when pests contact and leave dirt and germs on the food.
   D. food contamination

Skill level 1	
1	
0	
NR	

8. Food hygiene includes

   A. covering up cuts and sores with waterproof plasters.
   B. removing rings and accessories before handling food.
   C. wash up kitchen equipment using hot, soapy water.
   D. cooking foods at the appropriate temperature to kill pathogens.

Skill level 1	
1	
0	
NR	

9. Name the stage of the design process where the designer finds out specific information on the expectations that defines the product needed by the customer.

   A. Designing
   B. Investigation
   C. Building
   D. Evaluation

Skill level 1	
1	
0	
NR	

10. This means sketching the prototype and actually making it in response to the problem identified.

   A. Designing
   B. Investigation
   C. Producing
   D. Evaluation

Skill level 1	
1	
0	
NR	

SECTION B: Short Answer Questions

Answer all the questions in the given spaces.

1. In the Food Industry, regulations are needed for the production of food for the consumption of the community.

   a. State the reason for this need.

Skill level 1	
1	
0	
NR	

   b. Give **ONE** example of a personal hygiene regulation, restaurants should use.

Skill level 2	
2	
1	
0	
NR	

   c. Explain the need for the regulation above in (1b).

Skill level 3	
3	
2	
1	
0	
NR	

2. a. Define the following terms.

i. Kitchen Hygiene

Skill level 1	
1	
0	
NR	

ii. Food Hygiene

Skill level 1	
1	
0	
NR	

iii. Personal Hygiene

Skill level 1	
1	
0	
NR	

b. For each of the above terms, describe the techniques and standards you would observe if you were working in one of the top restaurants.

i. Kitchen Hygiene

Skill level 2	
2	
1	
0	
NR	

ii. Food Hygiene

Skill level 2	
2	
1	
0	
NR	

iii. Personal Hygiene

Skill level 2	
2	
1	
0	
NR	

3. Nancy eats only whole, unprocessed foods and beverages. She asserts that "we would all be better off if we ate foods fresh off the farm" instead of allowing our food industry to "spray" foods with factory-produced vitamins and minerals. Do you agree with her position? Why or why not?

Skill level 2	
2	
1	
0	
NR	

4. Describe how you might balance the 400-Calorie cinnamon roll you had for a morning snack with your lunch choice?

Skill level 3	
3	
2	
1	
0	
NR	

5. Choose any **TWO** of these and for each **ONE**, list each of their food sources according to their types or classifications.

Nutrients: Carbohydrates, Fats, Proteins.

Choice 1:_____

_____
_____
_____
_____
_____

Skill level 2	
2	
1	
0	
NR	

Choice 2:_____

_____
_____
_____
_____
_____

Skill level 2	
2	
1	
0	
NR	

6. Explain at least **THREE** factors that influence food spoilage.

_____
_____
_____
_____
_____
_____
_____
_____
_____
_____
_____
_____
_____
_____
_____
_____

Skill level 3	
3	
2	
1	
0	
NR	

7. The digestive system enables the body to use the food it takes in but the processes that happens to the food are more important. Explain the following processes with references to food and nutrient examples.

a. Digestion

Skill level 3	
3	
2	
1	
0	
NR	

b. Absorption

Skill level 3	
3	
2	
1	
0	
NR	

8. Explain the stage of Designing in the Design Process with reference to your IA project this year.

Skill level 3	
3	
2	
1	
0	
NR	

SECTION C: Extended Response Questions

Answer all the questions in the spaces provided.

1. This is a sample menu for an Obese person.

Sample menu for an Obese

BREAKFAST
1 large egg scrambled or fried
1 slice whole-wheat toast with 1 teaspoon butter or margarine
1 slice watermelon
1cup skim milk

LUNCH
1 chicken salad sandwich made with 3 ounces cooked chicken breast, tomatoes celery, lettuce, 1 teaspoon mayonnaise, 2 slices whole-wheat or white bread.
1 guava (or other whole fruit)
1 juice pack drink

DINNER
3 ounces lean roast beef, broiled
1 cup blanched Pok Choi (Chinese cabbage)
1 cup skim milk

SNACK
2 cups popped light popcorn

a. Define this nutrition related disease – **Obese**.

_____
_____
_____
_____

Skill level 1	
1	
0	
NR	

b. Why might the diet that optimizes health be different for different people?

_____
_____
_____
_____
_____
_____
_____

Skill level 2	
2	
1	
0	
NR	

c. How does the **Healthy Diet Pyramid** help you follow the recommendations of the **Dietary Guidelines**?

Skill level 3	
3	
2	
1	
0	
NR	

d. Draw the Healthy Diet Pyramid and Classify the diet given above in (1a), into their appropriate levels.

Comment on the distribution of this meal.

Skill level 4	
4	
3	
2	
1	
0	
NR	

e. Why is variety in a diet important?

Skill level 3	
3	
2	
1	
0	
NR	

f. What is the connection between obesity and moderation in a diet?

Skill level 3	
3	
2	
1	
0	
NR	

2. You have volunteered to participate in a 20-mile walk-a-thon to raise money for a local charity. You have been training for several weeks, and the event is now two days away. An athlete friend of yours advises you to "load up on carbohydrates" today and tomorrow and says that you should avoid eating any foods that contain fat during the day of the walk-a-thon. Do you take this advice? Why or why not?

Skill level 4	
4	
3	
2	
1	
0	
NR	

3. Your Internal Assessment this year was an investigation into and making a meal that could help out someone with a nutritional related disease.

Evaluate the meal you prepared by evaluating the materials, equipment, resources, recipe, the product, the process, the time and cost, the appropriateness of meal and mealtime and the presentation.

Nutritional Disease: _____

Your Meal Menu: _____

Skill level 4	
4	
3	
2	
1	
0	
NR	

MAJOR AREA 4: TEXTILES AND GARMENT CONSTRUCTION

SECTION A: Multiple Choice Questions

Circle the letter of the **BEST** answer.

1. The most important measurements that decide the sizes for women's tops, includes

   A. arm length and hipline.
   B. back waist length and bust line
   C. waist to ankles length
   D. waist to knee length

Skill level 1	
1	
0	
NR	

2. The most important factor to consider when selecting men's overalls for hard labour is the fabric's

   A. strength.
   B. shine.
   C. color.
   D. beauty.

Skill level 1	
1	
0	
NR	

3. The longest natural fiber used in the commercial textile industry is

   A. Polyester.
   B. Cotton.
   C. Silk.
   D. Wool.

Skill level 1	
1	
0	
NR	

4. The very first step in the Design Process is to

   A. Research and investigate the project.
   B. Test and Evaluate the product.
   C. Design the product.
   D. Identify the Problem.

Skill level 1	
1	
0	
NR	

5. Re-designing of the product happens

   A. after presenting the solution.
   B. after testing and evaluating the product.
   C. before researching and investigating of solutions.
   D. before identification of the problem.

Skill level 1	
1	
0	
NR	

6. At which stage of the Design Process should a designer "Note Expectations about the solutions?"

   A. Investigating
   B. Designing
   C. Making
   D. Evaluating

Skill level 1	
1	
0	
NR	

7. Stating of the specifications and restrictions is part of the

   A. Problem Identification.
   B. Research and Investigation.
   C. Designing and building.
   D. Testing and Evaluating.

Skill level 1	
1	
0	
NR	

8. The basic principles of design that we use in designing garments include

   A. Repetition, line, form.
   B. Shape, line, Emphasis.
   C. Emphasis, Repetition, pattern.
   D. Pattern, Form, Colour.

Skill level 1	
1	
0	
NR	

9. An analogous colour scheme is formed when

   A. Using colours opposite each other on the colour wheel.
   B. Using 3 hues from the colour wheel.
   C. Using colours that are next to each other on the colour wheel.
   D. One colour is used by tinting or toning.

Skill level 1	
1	
0	
NR	

10. Which set of substances is not used for making fibres?

   A. Silk, chemicals
   B. Flax, wool
   C. Husk, bones
   D. Horse hair, chemicals

Skill level 1	
1	
0	
NR	

SECTION B: Short Answer Questions

Answer all questions in this section in the spaces given.

1. Describe the importance of each stage of the design process.

_____

_____

_____

_____

_____

_____

Skill level 2	
2	
1	
0	
NR	

2. Use these terms to draw and label the correct flow diagram in making cloth.

   Terms: Fabric, fibre, yarn, weaving, spinning.

_____

_____

_____

_____

_____

_____

Skill level 2	
2	
1	
0	
NR	

3. Define the following terms.

   i. Darts

_____

_____

_____

Skill level 1	
1	
0	
NR	

   ii. Stay-stitch

_____

_____

_____

Skill level 1	
1	
0	
NR	

iii. Hemming

_____

_____

_____

Skill level 1	
1	
0	
NR	

4. Draw the basic diagram for the ladies' top pattern pieces (front and back bodice) and put in the following symbols. Label them.

   i. Place on fold line

   ii. Stitching line

   iii. Grainline

Skill level 1					
1		1		1	
0		0		0	
NR		NR		NR	

5. Describe what happens to the figure when wearing fabric with:

   i. Curved lines

Skill level 2	
2	
1	
0	
NR	

   ii. Vertical lines

Skill level 2	
2	
1	
0	
NR	

6. Name **THREE** of the construction techniques you used on your project this year and analyse how you applied them on your dress.

Skill level 3	
3	
2	
1	
0	
NR	

7. Clothing is a MUST for everyone.

a. Clarify reasons for wearing clothing by describing why people need different types of clothing, and give clear examples.

Skill level 2	
2	
1	
0	
NR	

b. Sometimes clothing items are spoiled by stains. Name a common stain and describe how to remove it from your clothing.

Skill level 2	
2	
1	
0	
NR	

8. Compare and contrast the commercial pattern and the free-hand cutting you used for your project this year.

Skill level 3	
3	
2	
1	
0	
NR	

9. Fibre properties affect the usages of the fabrics constructed from them especially if they are 100%. Choose any **TWO** of the following and discuss the reasons why these items are constructed from the given fibres.

   i. Towels are made from cotton yarns.

   ii. Ball gowns made from silk fabrics.

   iii. Tea towels made from linen fabrics.

Choice 1: _____

_____

_____

_____

_____

_____

_____

_____

_____

_____

_____

_____

_____

_____

_____

_____

_____

_____

Skill level 3	
3	
2	
1	
0	
NR	

Choice 2: _____

_____

_____

_____

_____

_____

_____

_____

Skill level 3	
3	
2	
1	
0	
NR	

10. Discuss the necessity of conferring and following the instruction sheet inside the pattern envelope. Use **TWO** of the information in the instruction sheet for your discussion.

    i. Information 1.

Skill level 3	
3	
2	
1	
0	
NR	

ii. Information 2.

Skill level 3	
3	
2	
1	
0	
NR	

SECTION C: Extended Response Questions

Answer all questions. Write your answers in the spaces provided.

1. Explain what is involved in the following stages of the Design Process.

   a. Producing Stage

Skill level 3	
3	
2	
1	
0	
NR	

   b. Evaluating Stage

Skill level 3	
3	
2	
1	
0	
NR	

2. Write an evaluation of all the materials you used for your project this year.

Skill level 4	
4	
3	
2	
1	
0	
NR	

3. When sewing garments, it is important to choose clothes or styles that camouflage or enhance the body of the wearer. Sewing make your clothes fit well, gives a flattering style, suitable fabric in a complimentary colour.

   i. Choose one of the given figure types and suggest appropriate clothing for them using fashions with lines, styles, fabrics, and color schemes that flatter etc.

   Figure types to choose from:

   Short and slender, Short and heavy, Tall and slender, Tall and heavy, Top-heavy, and Bottom-heavy.

   Figure type chosen: _____

Skill level 4	
4	
3	
2	
1	
0	
NR	

ii. Study the pattern given, then answer the question below.

If you sew the dress view **TWO**, write the first 5 steps you will need to carry out in sewing the dress. Make sure you use the pattern pieces given on this picture.

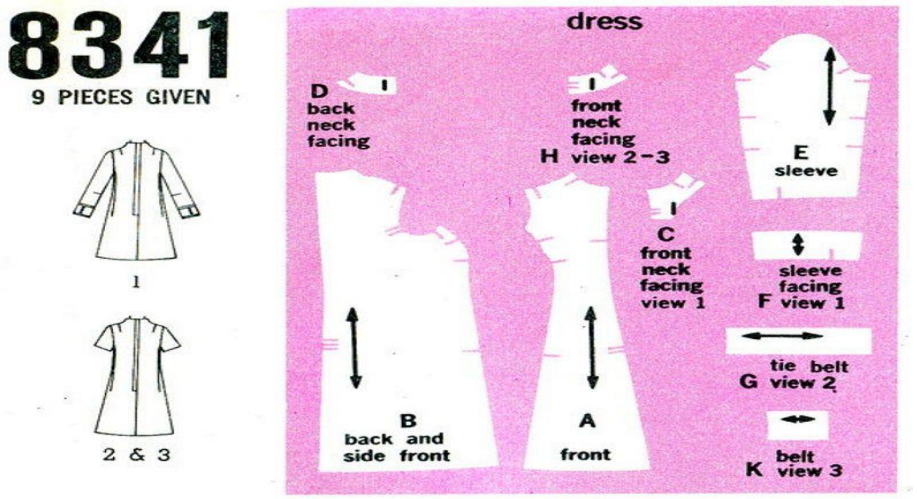

MISS PETITES' AND MISSES' DRESS: The dress with back zipper and front princess seaming has "raised" neckline, set-in sleeves and pleat in center front seam. V. 1 with slit opening in front neckline has button trimmed, top-stitched, long sleeves. V. 2 and 3 have short sleeves. V. 2 with loop and button trim has tie belt stitched in front seams. V. 3 has button trimmed belt stitched in front seams.

Suggested fabric types — Cottons and blends. Linen. Silks, synthetics and blends; pique, silk linen, homespun, hopsacking, bonded crepe, gabardine, silk and worsted. View 1 and 3 also in lightweight wools and blends; wool crepe, wool gabardine, wool flannel, double knits. View 3 also in velvet, velveteen. Satin.

Skill level 3	
3	
2	
1	
0	
NR	

4. Sewing equipments are plenty and dangerous.

   a. Explain the importance of keeping the sewing room clean at all times.

Skill level 3	
3	
2	
1	
0	
NR	

b. Discuss the importance of the sewing machine switch to the safety of operating it.

Skill level 4	
4	
3	
2	
1	
0	
NR	

MAJOR AREA 5 : TECHNICAL GRAPHICS

A. Multiple Choice Question:

Circle the letter of the **BEST** answer.

Study the diagram below and answer **question 1 to question 5.**

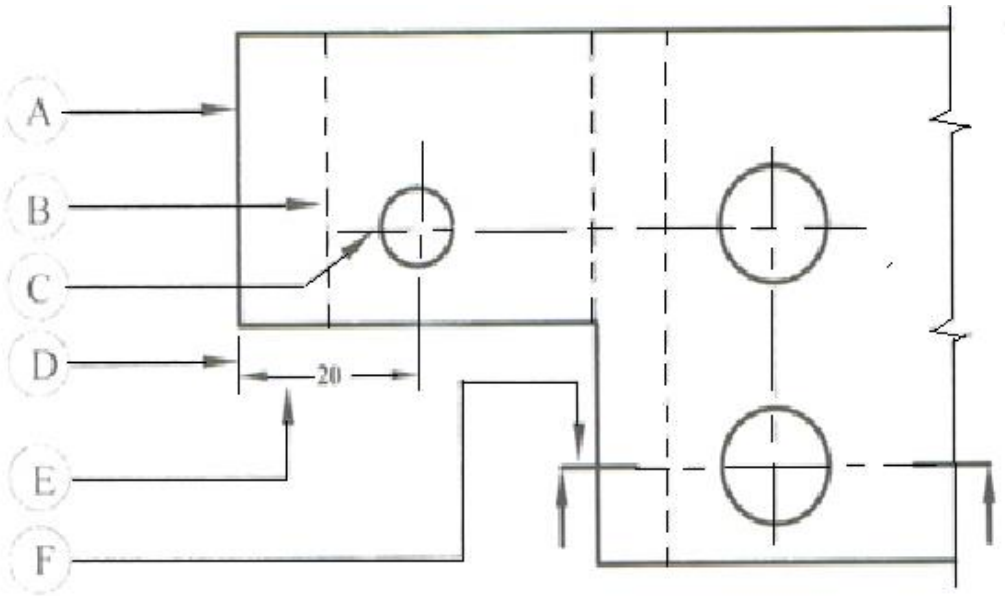

1. What is the name of the **Line Type A**?

   A. Continuous thin line.
   B. Continuous thick line.
   C. Thin chain line.
   D. Thin dashed line.

Skill level 1	
1	
0	
NR	

2. What is the name of the **Line Type B**?

   A. Continuous thin line.
   B. Continuous thick line.
   C. Thin chain line.
   D. Thin dashed line.

Skill level 1	
1	
0	
NR	

3. What is the name of the **Line Type C**?

   A. Continuous thin line.
   B. Continuous thick line
   C. Thin chain line.
   D. Thin dashed line.

Skill level 1	
1	
0	
NR	

4. What is the application of **Line D**?

A. To indicate visible outlines.
B. To show outlines of hidden features.
C. For dimension and projection lines.
D. To indicate a cutting plane for section views.

Skill level 1	
1	
0	
NR	

5. What is the application of **Line Type F?**

A. To indicate visible outlines.
B. To show outlines of hidden features.
C. For dimension and projection lines.
D. To indicate a cutting plane for section views.

Skill level 1	
1	
0	
NR	

6. What pictorial drawing where 30° is used for projection?

A. Perspective drawing.
B. Orthographic drawing.
C. Oblique drawing.
D. Isometric drawing.

Skill level 1	
1	
0	
NR	

7. What Stage of the design process where ***"Clarify the problem"*** took place?

A. Investigating.
B. Devising.
C. Making.
D. Evaluating.

Skill level 1	
1	
0	
NR	

8. What Stage of the design process where ***"Implement a decision"*** took place?

A. Investigating.
B. Devising.
C. Making.
D. Evaluating.

Skill level 1	
1	
0	
NR	

9. What Stage of the design process where ***"How well does it work"*** took place?

A. Investigating.
B. Devising.
C. Making.
D. Evaluating.

Skill level 1	
1	
0	
NR	

B. Short and Long Answer Questions.

Answer ALL the questions given.

1. Design

a. Define the term Design Brief.

Skill level 1	
1	
0	
NR	

b. Briefly describe the stage of Making in the design process

Skill level 2	
2	
1	
0	
NR	

c. Explain what is involved in the Evaluating stage of the design process of your project that you used in your Internal Assessment (IA) this year.

Skill level 3	
3	
2	
1	
0	
NR	

2. Standard Technical Drawing Symbols

a. Complete the table below by naming the following technical drawing symbols:

	Technical Drawing Symbols	Name of the Technical Drawing Symbols
i.	R	
ii.	℄	
iii.	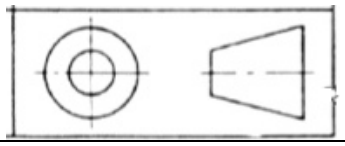	

Skill level 1	
1	
0	
NR	

Skill level 1	
1	
0	
NR	

Skill level 1	
1	
0	
NR	

3. Interpenetration of Solid and Geometrical Construction:

a. Complete the front view below showing the intersection of the cylinders. Show all construction lines.

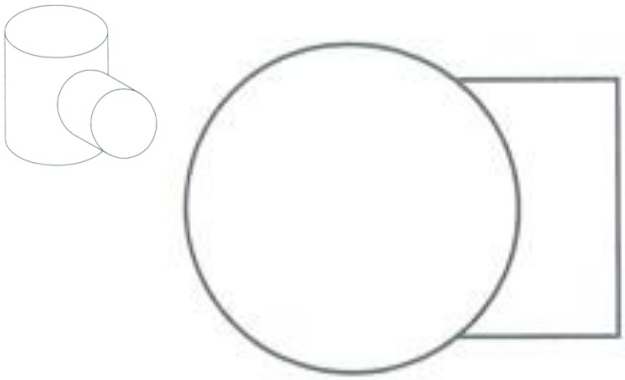

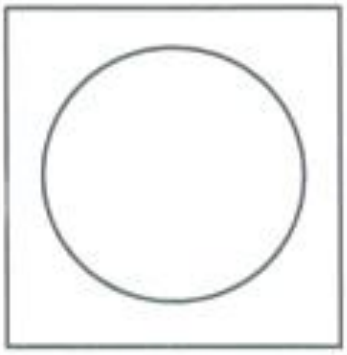

Skill level 3	
3	
2	
1	
0	
NR	

b. Describe **TWO** types of lines you used in your drawing in a.

Skill level 2	
2	
1	
0	
NR	

c. Construct a circle inside the given triangle ABC below to neatly touch the sides of the triangle by:

i. Bisecting all interior angle of the triangle

Skill level 2	
2	
1	
0	
NR	

ii. Locating the centre and completing the circle

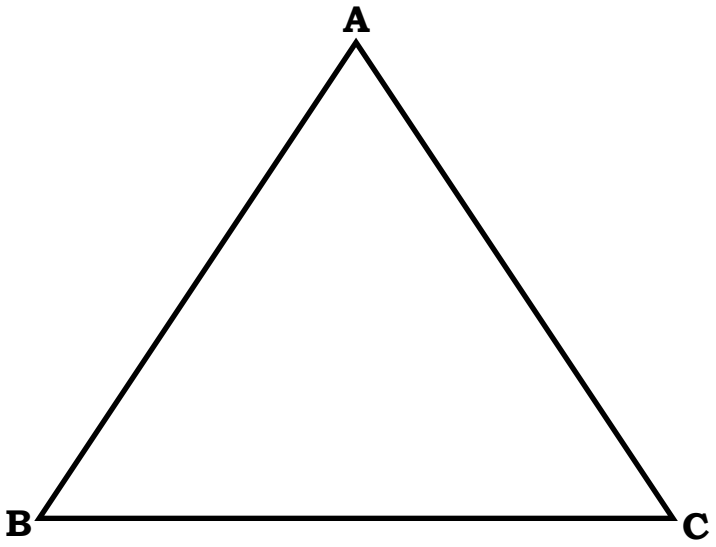

Skill level 3	
3	
2	
1	
0	
NR	

d. Construct a regular pentagon with 35 mm each side.

e. Draw **ONE** complete turn of a right-handed helical spring with 60 mm mean diameter, a 40 mm pitch and made from 12 mm diameter wire.

Skill level 3	
3	
2	
1	
0	
NR	

4. Development

Study the given Oblique Square Pyramid 1234abdc below and answer the following questions.

a. Find the true length of the given sides of the Square Pyramid.

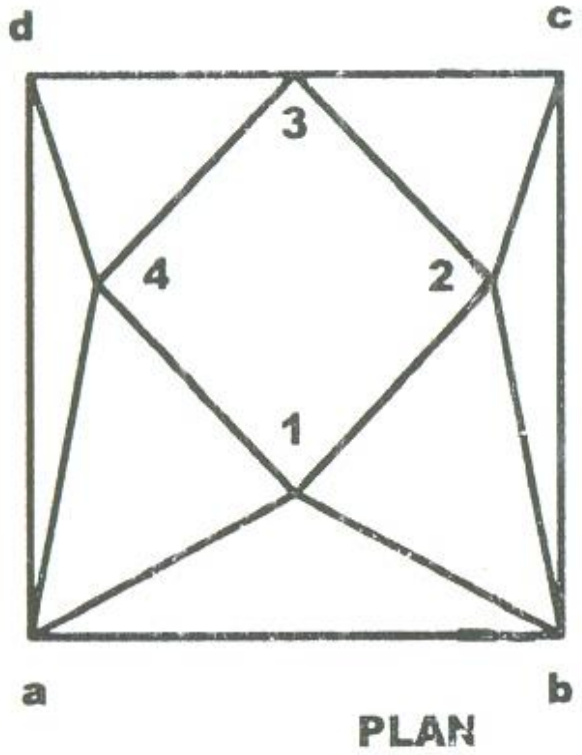

i) True Length **1a** = _____ mm

ii) True Length **2b** = _____ mm

iii) True Length **3c** = _____ mm

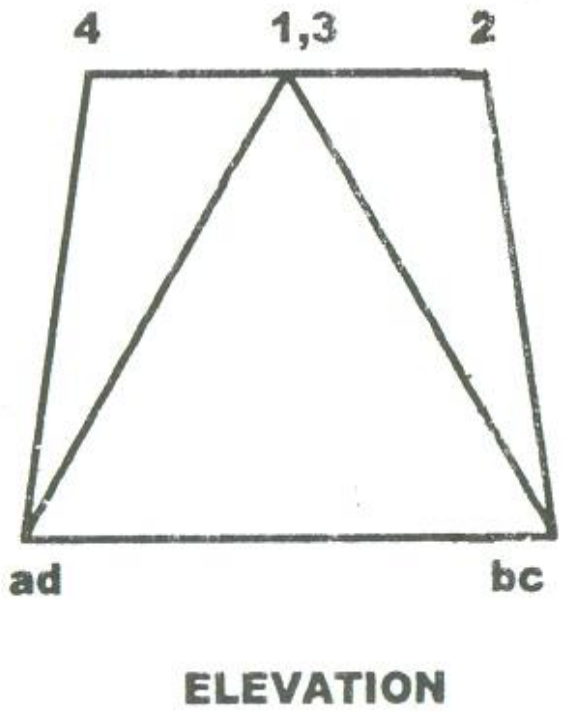

Skill level 3	
3	
2	
1	
0	
NR	

b. Draw the development of the Oblique Square Pyramid 1234abdc using triangular method.

Skill level 4	
4	
3	
2	
1	
0	
NR	

5. Vector Diagrams and Forces

a. Define forces acting on a mass or body at rest.

Skill level 1	
1	
0	
NR	

_____

_____

b. Given below is the Space diagram of parallel forces acting on a beam. Use the Link or Funicular and Force or Load line with Polar diagram to determine the:

Skill level 3	
3	
2	
1	
0	
NR	

i. Position of the resultant

ii. Reaction at the supports RL and RR

Skill level 3	
3	
2	
1	
0	
NR	

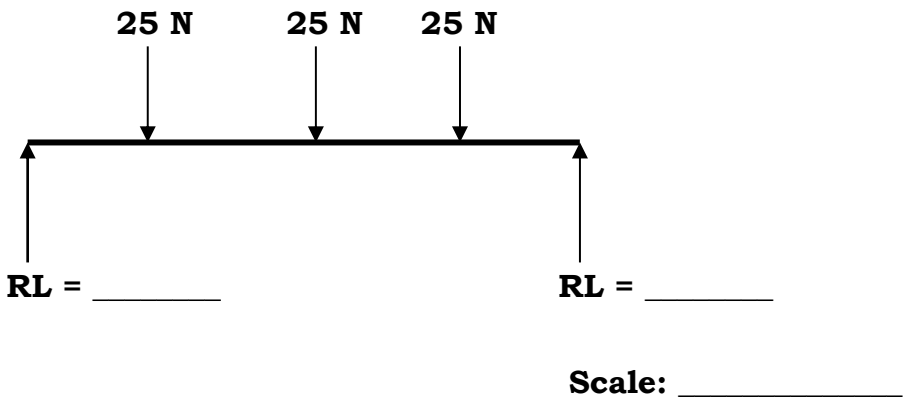

6. True Shape and Angle, Orthographic and Assembly Drawing

a. Projection of the triangle ABC onto the horizontal and vertical planes is given below. Use any method of your choice to determine:

Skill level 3	
3	
2	
1	
0	
NR	

i. the true shape of triangle ABC

ii. the true angle of inclination.

Skill level 3	
3	
2	
1	
0	
NR	

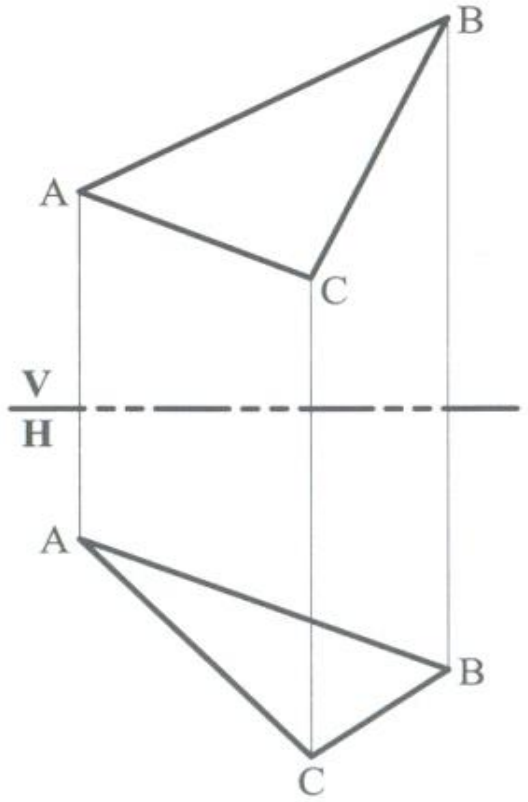

b. List **TWO** different types of 2-dimensional drawings

Skill level 2	
2	
1	
0	
NR	

i. _____

ii. _____

c. Define Oblique Drawing

Skill level 2	
2	
1	
0	
NR	

_____

_____

_____

d. If the **2 : 1** scale is to be used in drawing orthographic views of the support bracket given below:

Skill level 1	
1	
0	
NR	

i. What is the total length of the scaled diagram?

_____

Skill level 1	
1	
0	
NR	

ii. What is the total height of the scaled diagram?

_____

SUPPORT BRACKET

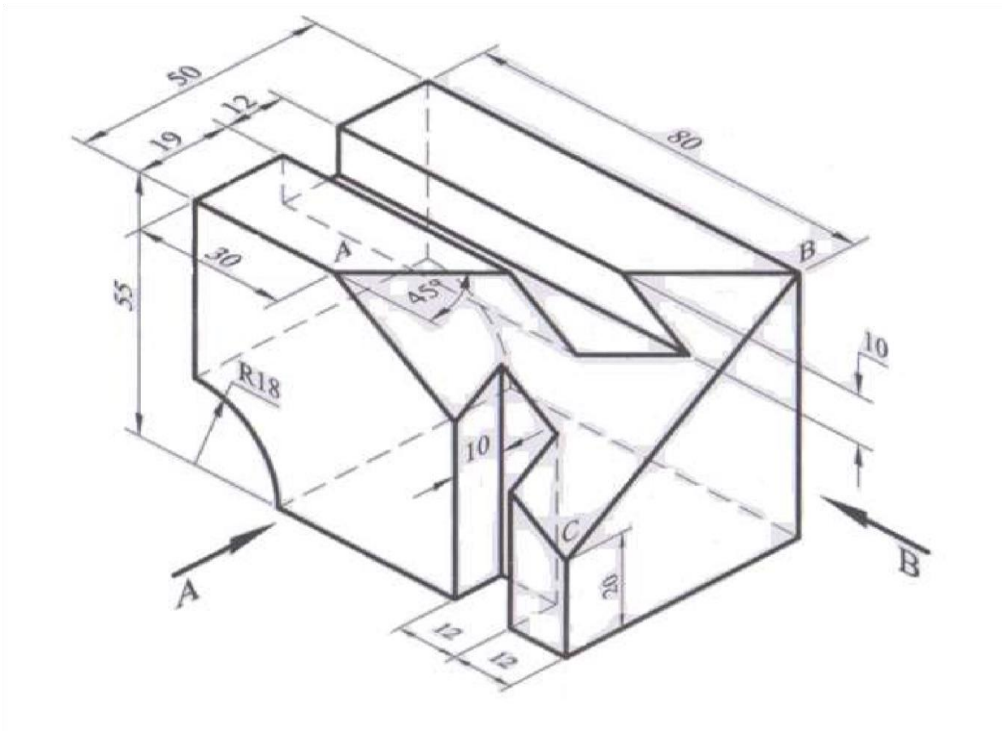

e. List the types of lines you could use if you draw the Support Bracket in Orthographic Projection.

Skill level 2	
2	
1	
0	
NR	

i. _____

ii. _____

f. A CI Jaws Support is given below. Draw, with hidden details, the following views in **Third Angle Projection**:

Skill level 4	
4	
3	
2	
1	
0	
NR	

i. A front view from direction A

ii. A side view from direction B

Skill level 4	
4	
3	
2	
1	
0	
NR	

Use any scale of your choice, give 4 main dimensions and identify the drawing

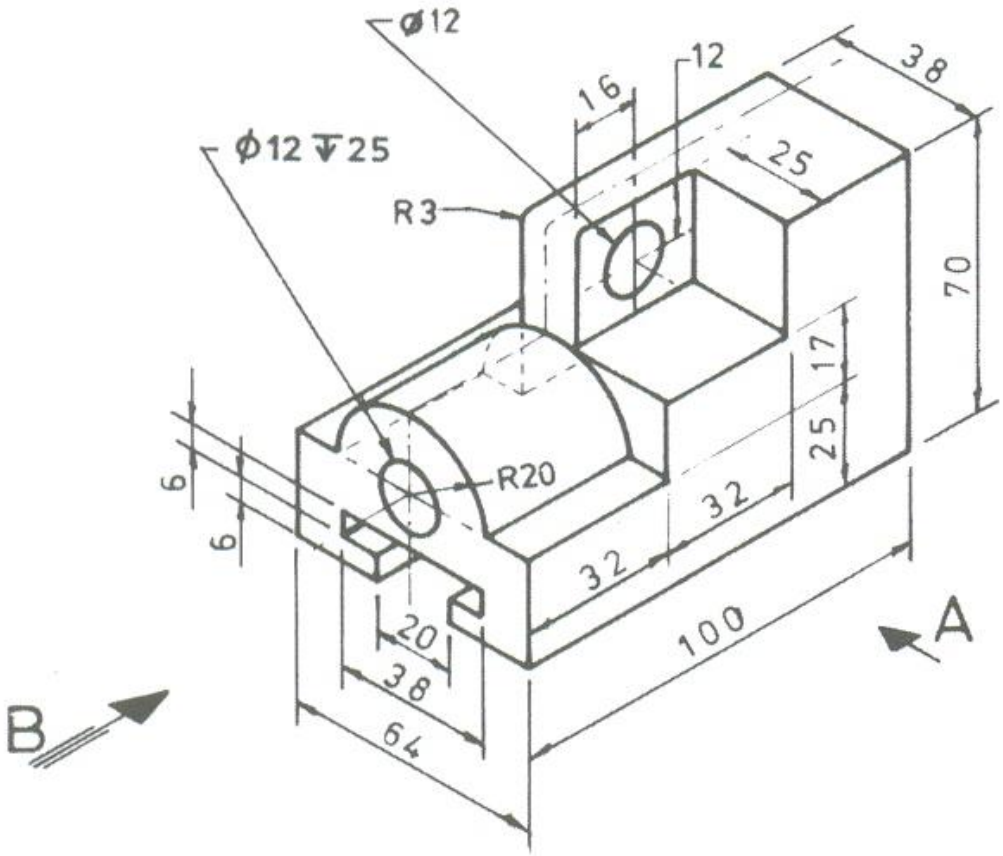

CI Jaw Support

DO Question 6-part f here

THIS PAGE HAS BEEN DELIBERATELY LEFT BLANK